29-31 Richland St. Kingsgrove. Sydney NSW 2208 Australia
Phone: 1300 236 687
enquiries@domuslighting.com.au | www.domuslighting.com.au

Installation Manual

Date: October 26, 2026 7:26 am

# THERMAFLOW

Thank you for purchasing your new THERMAFLOW bathroom heater, Please take the time to read and understand the instruction sheet below. Failure to do so may void warranty.

## Specifications

| | | | | | | | |
|---|---|---|---|---|---|---|---|
| Voltage: | 240V AC | Power: | 2150W | Motor Wattage: | 60W AC | Fan Size: | 350mm |
| Heat Wattage: | 2050W | Heat Type: | PTC Heating Element | Air Extraction: | 300m$^3$/h | Light Wattage: | 12W LED |
| IP Rating: | IPX2 | CRI: | ≥80 | Decibel Rating: | ≤46dB | | |
| Fascia Size: | Ø350mm | Duct Size: | 100mm | Cutout: | Ø330mm | | |
| *Accessories: 6 Switch V1.5 Digital Wall Controller, 3M Flexible Duct, Exterior Grille.* | | | | | | | |

| Lumen Output | | |
|---|---|---|
| 3000K | 4000K | 5000K |
| 850lm | 950lm | 900lm |

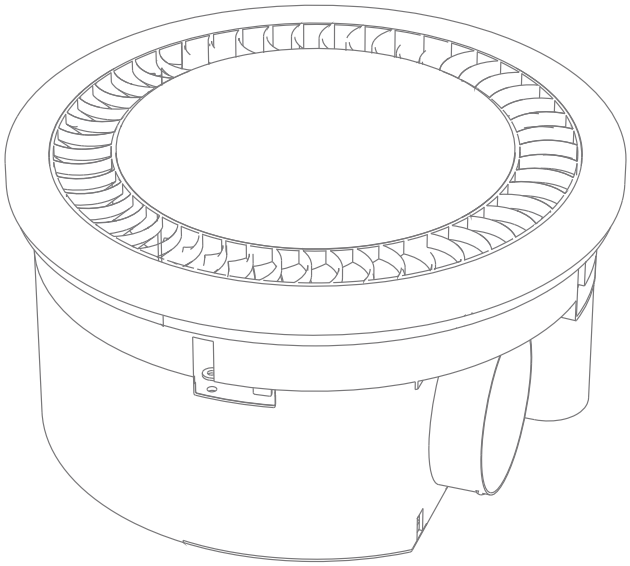

## Included In The Box:

- 1 x 4 in 1 Standard Bathroom Unit
- 1 x Instruction Manual
- 1 x 3M Duct
- 1 x Outlet Grille
- 1 x Cutout Template
- 1 x 6-Switch V1.5 Digital Wall Controller
- 1 x Horizontal Switch decal White

- After installation, electricians must tick off all items on the quick checklist and fill out their details towards the back of this Installation and User Manual.
- The electric mains must be equipped with an automatic circuit breaker with a rated current not less than 10A.

## Warranty Procedure*

- For online warranty bookings visit: www.domuslighting.com.au/warranty
- For technical advice call: 1300 236 687 (Monday to Friday from 9am to 5pm EST)
- *Warranty only available within Australia

**THE ELECTRIC MAINS MUST BE EQUIPPED WITH AN AUTOMATIC CIRCUIT BREAKER WITH A RATED CURRENT NOT LESS THAN 10A. MUST BE INSTALLED BY A LICENSED ELECTRICIAN.**
To protect your customer's WARRANTY please refer to the Manufacturer's warranty page.

## Best Recommendations and Tips for Optimal Extraction

**The ducting kit must be installed with the bathroom heater to ensure correct airflow and maximum extraction performance. Installation without the ducting kit may result in air recirculating through the fascia and reduced extraction efficiency.**

### A. While Operating the Bathroom Heater

Extraction performance may be compromised if the following process is not followed:

1. **Pre-heating the Room** – Preheat the bathroom using the HEAT function for up to 5 minutes before showering to reduce steam and condensation.
2. **Use Exhaust Fan After Shower** – This will assist in removing any build up of condensation and steam.
3. **Keep Windows closed works best:**
   a. **Controlled Airflow:** *Closing the window forces the fan to pull dry / conditioned air from the rest of your house (usually through the gap under the bathroom door).*
   b. **Sweeps the Whole Room:** *This creates a clear path that draws steam away from the shower and directly out of the exhaust fan.*
   c. **Prevents "Negated Air Flow":** *If the window is wide open right next to the fan, the fan will simply pull air from the window and push it straight back out. The rest of the room stays humid.*
   d. **Avoids Weather Issues:** *Keeping it closed prevents hot, humid air from rushing inside during summer, or freezing air from entering during winter.*
   e. **The Exceptions - No door gap:** *If your bathroom door seals completely airtight to the floor, the fan cannot pull air from the house. In this rare case, crack the window open slightly.*

### B. Pre-Installation

Things to consider when installing the Bathroom Heater:

1. **As high as possible** - Hot air, steam, smoke, and fumes rise, so ceiling height or near-ceiling placement gives the best airflow removal.
2. **Close to the source of heat, steam, or contaminants** - near the shower or toilet area preferably.
3. **On the opposite side from fresh air entry** - You want air to flow across the room.

Example:
Fresh air enters through a door/window/louvre
Exhaust fan removes air from the opposite side/high point

4. **Away from dead air corners** - Avoid installing in corners where airflow is restricted.
5. **With the shortest and straightest duct run possible** - Long ducts and multiple bends dramatically reduce extraction performance and increase noise.

*These are recommendations to maximise the most optimal extraction performance levels.*

**THE ELECTRIC MAINS MUST BE EQUIPPED WITH AN AUTOMATIC CIRCUIT BREAKER WITH A RATED CURRENT NOT LESS THAN 10A. MUST BE INSTALLED BY A LICENSED ELECTRICIAN.**
To protect your customer's WARRANTY please refer to the Manufacturer's warranty page.

## IMPORTANT - Must Read Prior To Installation – Hazard of Electric Shock, Fire and Serious Injury

1. Distributor and installer details and purchase receipts are essential for on-site warranty claims and must be presented to repair personnel. A page towards the back of this manual has been allocated to allow you to record these details.
2. PTC Bathroom Heaters and fixed wiring products must only be installed by persons who are appropriately licensed by the applicable State regulatory body. Therefore, to protect our repair personnel, on-site warranty claims will not be accepted if products have been installed by unlicensed persons.
3. Damage caused by incorrect installation, force-majeure, electrical surges, lightning, power grid fluctuations, water or by incorrect connection to alternative power supply sources (such as solar inverters, etc.) is not eligible for warranty repair.
4. Install the PTC Bathroom Heater switches in a way that prevents them from being accessible to a person in a bath or shower.
5. The product must be installed at least 2.1M above the floor and to be at least 0.6M away from bath or shower. This heater is not equipped with a device to control the room temperature. The heater must not be within reach from the floor, as severe burns may occur due to high surface temperatures. Do not use this heater in small rooms or where the room area is occupied by persons not capable of leaving the room on their own.
6. "This appliance is not intended for use by persons (including children) with reduced physical, sensory or mental capabilities, or lack of experience and knowledge, unless they have been given supervision or instruction concerning use of the appliance by a person responsible for their safety. Children should be supervised to ensure that they do not play with the appliance." (AS/NZS 60335.1 C1.7.12). Means for disconnection must be incorporated in the fixed wiring in accordance with the wiring rules. The use of these products by children and the infirm must be under supervision.
7. The product should not be installed directly beneath a surface socket or power outlet.
8. The replacement of parts shall only be performed by the manufacturer, its service agent or suitably qualified persons. Please contact Domus Lighting or a qualified electrician if there is any issue with the unit. Do not attempt to disassemble, repair or modify the unit.
9. The mounting of the PTC Bathroom shall be performed by the qualified electrician; the fixing means for attachment to the ceiling shall be fixed with a sufficient strength to withstand 3 times the weight of the Bathroom heater.
10. Do not insert fingers or other objects into the fascia when the appliance is in operation, to avoid injury.
11. Do not spray water on the fascia to avoid short circuit or electrical shock.
12. Only install this product in strict accordance with the wiring diagram in these instructions if direct wiring is required. Otherwise, please use flex and plug and switch wiring supplied.
13. Use this product only in the manner intended by the manufacturer. Indoor use only.
14. The electric mains must be equipped with an automatic circuit breaker with a rated current not less than 10A.

**DANGER: Failure to follow these instructions can result in fire and serious injury.**

**WARNING: If unusual operating functions are observed, immediately stop using the Bathroom heater and contact the manufacturer, its agent or suitably qualified persons.**

To electricians and installers: The Australian Competition and Consumer Law 2010 mandates consumer protection against defects or poor workmanship in provision of services (such as installing a Bathroom heater). To protect yourself and the consumer these instructions must be followed. Failure to do so may result in the consumer making a claim against you for consequential loss or damage. Failure to follow these instructions below can also result in equipment damage.

For safety, and to protect your customers warranty, the following must be taken into account when installing and operating the product(s):

a. During installation, ensure to take care to avoid the surrounding wiring, building structures, and hidden utilities.
b. This product is designed specifically for cavity-type ceilings.
c. It is NOT recommended to install this product in a raked or cathedral ceilings.
d. It is recommended that the ceiling space is adequately ventilated to allow appropriate airflow throughout the product. Any restrictions on return air entering the room or exhausted air escaping from the ceiling space will impair effectiveness and may contribute to premature failure.
e. A minimum of 300mm clearance of ceiling space is required.
f. A minimum of 100mm clearance is required between the installation location and any other ducting in the ceiling space.
g. Follow regulations concerning the discharge of air have been met.
h. Joists, beams and rafters must not be cut or notched to install the product.
i. Failure to position the fascia correctly may cause the housing or fascia to warp.
j. The PTC Bathroom Heater Fascia will only accept a replacement LED Light panel from Domus. Do not install any other type of panel as this may cause overheating and damage to the unit.

## HAZARD OF ELECTRIC SHOCK, EXPLOSION, OR ARC FLASH

This product must only be installed and serviced by an appropriately qualified and/or licensed electrical person:

a. Isolate the electrical supply before doing any work on the product.
b. Ensure that the product has been correctly installed to the appropriate safety standards, local wiring rules and regulations and then tested for safe operation before reconnecting the electrical supply.
c. This unit must be properly grounded.
d. Make sure that all electrical connections are firmly screwed and secured into the terminal block.
e. This unit should not be installed near the curtains or other flammable materials, to avoid any risk of fire.

Failure to follow these instructions will result in death or serious injury.

**THE ELECTRIC MAINS MUST BE EQUIPPED WITH AN AUTOMATIC CIRCUIT BREAKER WITH A RATED CURRENT NOT LESS THAN 10A. MUST BE INSTALLED BY A LICENSED ELECTRICIAN.**

To protect your customer's WARRANTY please refer to the Manufacturer's warranty page.

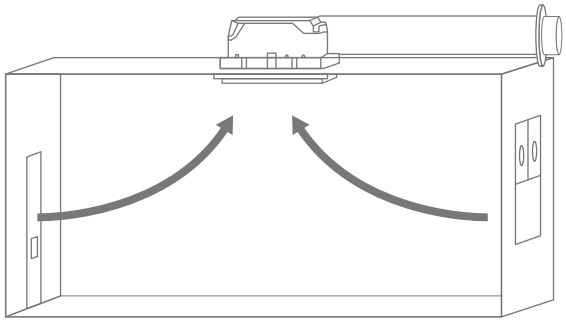

- Take some time to choose a suitable installation location and orientation. Ensure that all the gaps required around the product are observed and the structure is obstructed near the outlet. The area behind the intended position must be cleared of obstructions such as cables, common piping and brackets.

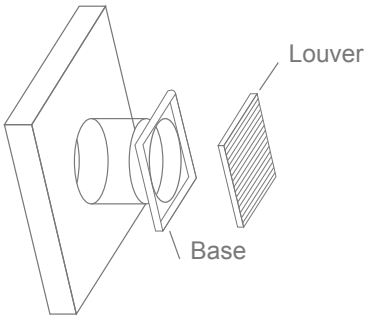


- Mark the diameter of the vent (about Ø100mm) at the desired position. Using the appropriate cutting equipment, cut along the marking line and remove excess material. Pass the pipe through the hole and connect it to the external wall exhaust vent. Secure the pipe connector with the supplied fixture.

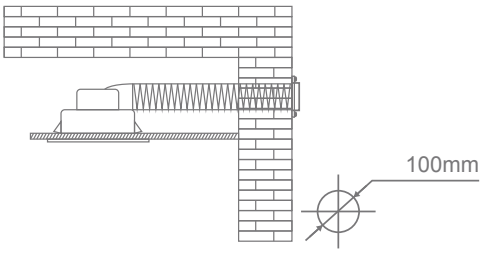


- Use four screws to secure the external wall exhaust vent in the desired position. Install the pipe according to the pipe installation recommendations on the previous page and direct the pipe towards the cutting outlet and exhaust outlet of the product.

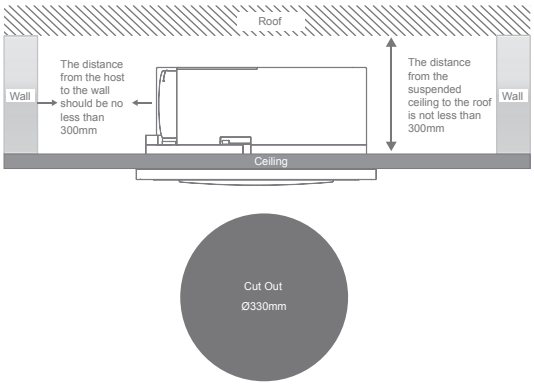


- Using the appropriate cutting equipment, cut a Ø330mm hole, and remove the excess material from the ceiling. Provide additional support for the ceiling, if necessary. Do not cut the hole larger than the specified cut size.

**THE ELECTRIC MAINS MUST BE EQUIPPED WITH AN AUTOMATIC CIRCUIT BREAKER WITH A RATED CURRENT NOT LESS THAN 10A. MUST BE INSTALLED BY A LICENSED ELECTRICIAN.**

To protect your customer's WARRANTY please refer to the Manufacturer's warranty page.

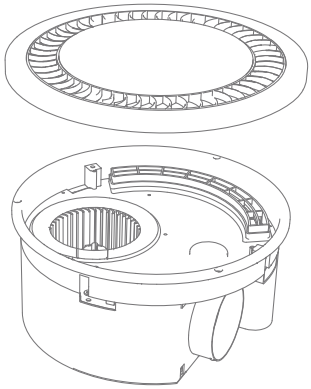

- Carefully remove the panel from the host machine and disconnect the male and female plug.

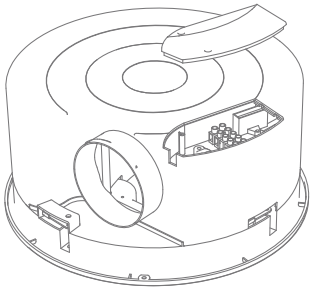

- Remove the junction box cover to access the terminal block, if hard wiring is required. Otherwise please plug in the three pin flex and plug provided.

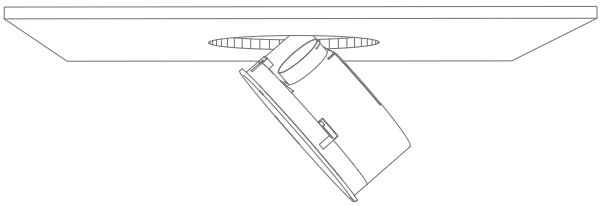

- Please use cutout template provided to cut hole in ceiling. Pull the wire from the cutting hole and connect according to the provided wiring diagram. Connect the pipe to the exhaust outlet and secure it to ensure that it is connected. Insert the unit into the cutting hole at an angle to ensure that the pipes are well connected and not covered or impacted by the unit. Ensure that the side clips pull inward so that the rest of the housing can pass through the hole without damaging the plasterboard.

**THE ELECTRIC MAINS MUST BE EQUIPPED WITH AN AUTOMATIC CIRCUIT BREAKER WITH A RATED CURRENT NOT LESS THAN 10A. MUST BE INSTALLED BY A LICENSED ELECTRICIAN.**

To protect your customer's WARRANTY please refer to the Manufacturer's warranty page.

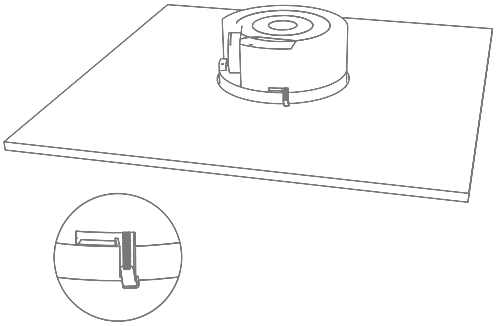

- By pushing the side clip outward, ensure that the unit is firmly fixed to the ceiling until it is flush with the ceiling.

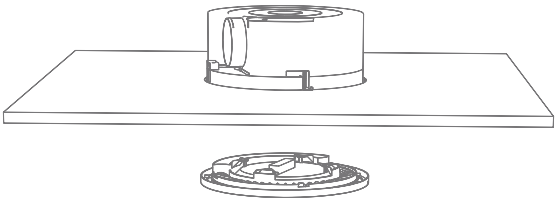

- Connect the LED lamp power connector to the driver output connector.
  **Warning:** The air outlet must be aligned with a special grille with heat resistance. Refit the panel to the unit making sure it is aligned with the main body. Ensure that the LED panel connectors and cables are not pinned down by the other components. Position the entire panel firmly on the unit. Turn on the heater and fan for at least 5 minutes before first use to eliminate any residual odour.

## Controller Operating Instructions

**Light:** Press to switch light on and off: The indicator switch button light will remain on until pressed to switch off. Long press the lighting button to activate the Colour Temperature CCT option function. Long press the button to switch between three colour temperatures of lighting (Warm White, Neutral White and White). Each long press switches the colour temperature to the selected colour temperature light.

**Exhaust Fan:** Press to active air extraction mode. The indicator switch button light will remain on. (Note: automatically switches off in 2 hours). To switch off the air extraction mode, press again and the indicator light on the switch button will also be off.

**Air Circulation:** Press to active air circulation mode. The indicator switch button light will remain on. (Note: automatically switches off in 2 hours). To switch off the air circulation mode, press again and the indicator light on the switch button will also be off.

**Heat:** Press to activate Heat II mode (this mode is a high heat mode). The mode indicator light will appear red, the indicator switch button light will appear white and remain on. Press again to activate Heat I mode (this mode is a low heat mode). The mode indicator light will appear red, the indicator switch button light will appear a softer 50% brightness white and remain on (Note: automatically switches off in 2 hours). To switch off the Heat mode, press the HEAT button and the mode indicator light will turn off, and the indicator light on the switch button will also be off.

**Aux:** AUX Button on Controller when connected, allows for auxiliary light/s or exhaust fan to be switched on the controller. Please ask your electrical contractor to install auxiliary connections to the bathroom heater through the available terminal in the terminal box, so this switch can be enabled and used.

**Standby:** Press to turn off all functions (when heating is on, the circulating fan will remain on for 30 seconds) and the indicator light of the standby switch button will be off.

**Please note that the HEAT mode will only work in conjunction with the air circulation mode, and will not work while the extraction mode is in use.**

**Digital Wall Controller Sound:** To switch digital wall controller sound off, press and hold the standby button for less than 3 seconds and release. The sound should now be disabled.



**THE ELECTRIC MAINS MUST BE EQUIPPED WITH AN AUTOMATIC CIRCUIT BREAKER WITH A RATED CURRENT NOT LESS THAN 10A. MUST BE INSTALLED BY A LICENSED ELECTRICIAN.**
To protect your customer's WARRANTY please refer to the Manufacturer's warranty page.

## Wiring

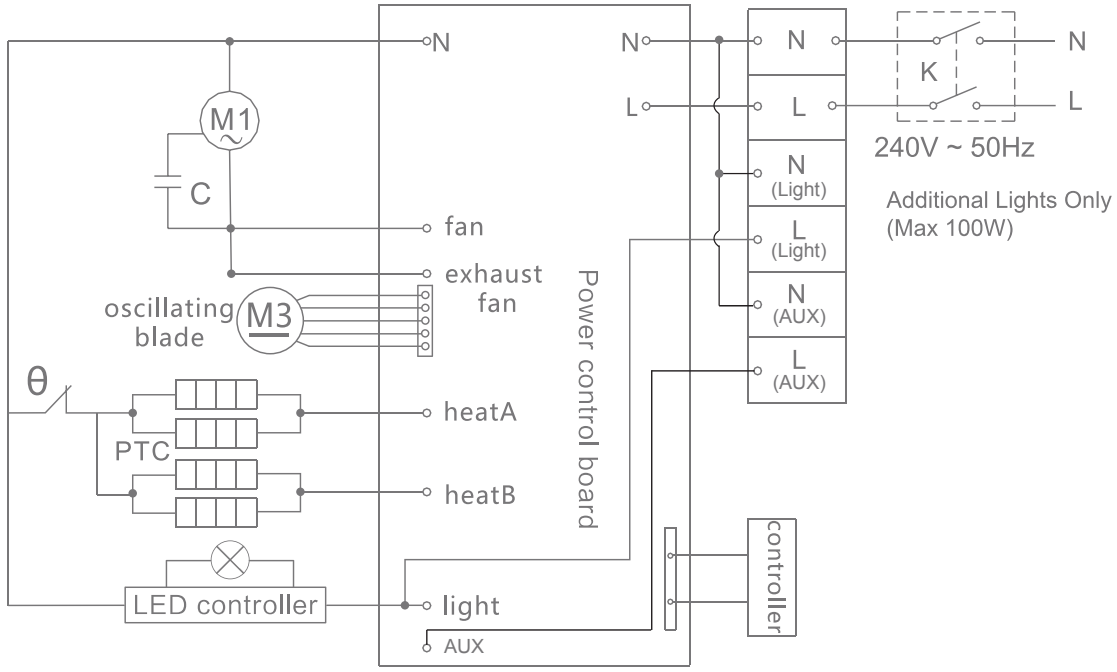


K:circuit breaker M1:capacitor motor M3:stepper motor

PTC:calorifere C:capacitor θ:thermal protector

## Cleaning Instructions

The appliance maintenance and cleaning should be performed every 3-6 months, or when dust, debris or dirt is visible.
Ensure that the product is switched off before cleaning.
Do not clean the appliance with any chemicals that may encourage corrosion or may damage the unit.
Always use a soft, damp, non-abrasive cloth to clean the product.
Regularly clean away debris, dirt and dust from inside the body, motor, blades and brackets.

**DANGER: Failure to follow these cleaning instructions can result in fire, serious injury or equipment failure.**

## Proof of installation

Fill out the details below and keep this manual. You will need to present your product information, installing electricians license number and proof of purchase for warranty claims.

### Customer Details

Customer Name: _____

Installation Site Address: _____

### Installing Electrician Details

Electrical company and Electrician Name: _____

License No: _____

Telephone: _____

Mobile: _____

Install Date: _____

**Product Details**

| QTY | Product Name | Colour |
|---|---|---|
| | | |
| | | |
| | | |
| | | |
| | | |
| | | |
| | | |
| | | |

**Purchase details**

| QTY | Product Name | Purchase Place | Purchase Date |
|---|---|---|---|
| | | | |
| | | | |
| | | | |
| | | | |
| | | | |
| | | | |
| | | | |

*PLEASE RETAIN THE PURCHASE RECEIPT FOR WARRANTY CLAIMS*

**THE ELECTRIC MAINS MUST BE EQUIPPED WITH AN AUTOMATIC CIRCUIT BREAKER WITH A RATED CURRENT NOT LESS THAN 10A. MUST BE INSTALLED BY A LICENSED ELECTRICIAN.**

To protect your customer's WARRANTY please refer to the Manufacturer's warranty page.

## Warranty Terms and Conditions

Manufacturer's warranty covers defects in the product only. It does not cover defects within the bathroom heater installation or improper maintenance. This warranty covers Australia only.
Warranty periods begin from the day of purchase from an authorised reseller or dealer. Warranty on builder supplied and installed products commences when bathroom heaters are delivered to the builder or contractor (which generally precedes hand over of the dwelling).

Warranty periods are as follows:

ELECTRONIC PARTS WARRANTY - DOMUS PTC Bathroom heaters

5 years in-home warranty on all components such as motor housing, digital controllers and faulty fascia trims (NOT INCLUDING NATURAL MATERIAL WEAR AND TEAR).

MOTOR AND MECHANICAL PARTS WARRANTY - DOMUS PTC Bathroom heaters

5 years in-home warranty on mechanical parts and the motor, excluding cosmetic issues and corrosion (unless reported in the first 3 months).

1 year warranty applies when the bathroom heater or relevant parts is used in any non-domestic applications.
This statement is required by the Australian Consumer Law 2010: "Our goods come with guarantees that cannot be excluded under the Australian Consumer Law. You are entitled to a replacement or refund for a major failure and for compensation for any other reasonably foreseeable loss or damage. You are also entitled to have the goods repaired or replaced if the goods fail to be of acceptable quality and the failure does not amount to a major failure."

Please note carefully - If the product is found to be free of defects or the product is not functioning properly as a result of faulty installation or lack of maintenance then Domus Lighting Pty Ltd or its service agent reserve the right to charge a service fee to rectify the reported problem.

Damage caused by incorrect installation, force-majeure, electrical surges, lightning, power grid fluctuations, water or incorrect use of alternative power supply sources (such as solar inverters etc.) will not be covered by warranty. This warranty does not cover the product being incorrectly used, physically abused, accidentally damaged or not serviced in accordance with the maintenance instructions.

This product warranty excludes to the fullest extent possible under law any liability for consequential loss or damages directly or indirectly resulting from a faulty Bathroom heater or accessory product that is not installed or maintained according to the installation instructions. When installed, maintained and used according to the instructions such loss or damage can be easily avoided or minimised.
Signals (ripple control) sent through the power grid by the electricity supplier for the control of other devices may cause intermittent noises and do not occur as a result of a fault in the bathroom heater.
WHS regulations may prohibit technicians from attempting to access products installed above a certain height without special measures in-place. It is the site owner's responsibility to provide those measures at their own cost or an on-site/in-home warranty service may be refused. The product will need to be removed and reinstalled at the owner's expense.

*Domus reserves the right to change specifications, modify designs or discontinue items without incurring obligation and whilst every effort is made to ensure that descriptions, specifications and other information is correct, no warranty is given in respect thereof and the company shall not be liable for any error within.*

**THE ELECTRIC MAINS MUST BE EQUIPPED WITH AN AUTOMATIC CIRCUIT BREAKER WITH A RATED CURRENT NOT LESS THAN 10A. MUST BE INSTALLED BY A LICENSED ELECTRICIAN.**
To protect your customer's WARRANTY please refer to the Manufacturer's warranty page.