DECO-13-ADAPT

Adaptor Plate

Description

140mm adaptor plate to suit Deco 13 LED Downlight.
Designed to allow the Deco 13 to be installed in larger cutout hole sizes.





Specification Features

Diameter:	140mm
Height:	27mm
Cutout (Ø):	Ø110-130mm

Suits the Deco-13 Round (sold separately)

Diagrams / Additional

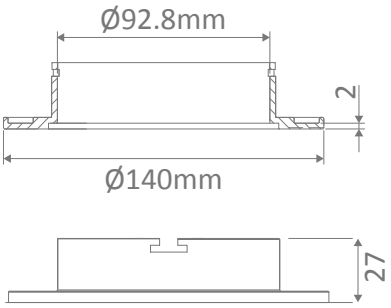

Item No.	Variant	
	Wht	*Blk*
DECO-ADAP	20504	20507

DECO-13 *(Sold Separately)*



Item No.	Variant			CCT
	Wht	*Blk*	*Alu*	
DECO-13-RND	20420	20421	20422	Trio

Domus 29-31 Richland Street. Kingsgrove NSW 2208 | Phone: (02) 9554 9600 | email: enquiries@domuslighting.com
Specification subject to change without prior notice.