DOMUS®

Date: 4 November 2025 3:41 pm

Neo-Pro-13

LED Recessed Downlight

Description

The NEO-PRO range of LED downlights are the latest upgrade to the NEO Series, with improved functions such as TRIO Tri-colour switchable technology as well as a higher IP Rating for wet areas. Designed to reduce glare as well as maintaining high performance in light output and energy consumption. LED recessed downlight with anti-glare deep set frame, frosted diffuser, and a dimmable LED driver with flex & plug. Fully dimmable with suitable dimmers. Now with TRIO, the added option of changing the colour temperature output of the downlight with a dip switch at the back of the fitting.

Specification Features

Input Voltage:	240V
Power (W):	13
IP rating (IP):	IP65**
Lumens (lm):	Warm White 3000K - 850lm Neutral White 4000K - 1000lm White 5700K - 900lm
LED type:	SMD
CCT:	3000K - 4000K - 5700K
CRI:	≥80
Beam angle (°):	80°
Dimmable:	Yes*
Lifespan (hrs):	50,000hrs
Cutout (Ø):	Ø90mm

**Fully dimmable with suitable dimmers.*
***IP65 from front only.*



IC-4

Diagrams / Additional

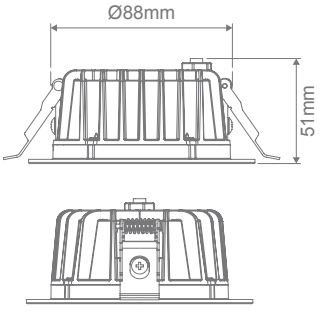

Cutout: Ø90-95mm

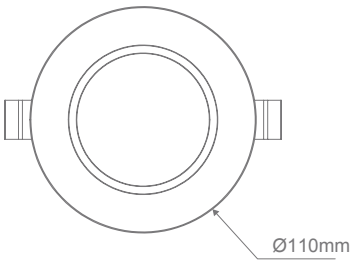

Item No.	Variant		CCT
	Wht	*Blk*	
NEO-PRO-13-REC	20916	20915	TRIO
	DALI		
	21607	21608	TRIO

Domus 29-31 Richland Street. Kingsgrove NSW 2208 | Phone: 130 236 687 | email: enquiries@domuslighting.com.au
Specification subject to change without prior notice.